Coaxial-to-Ethernet
Conversion Kit

KiweeBroadband

KB-M3-02E
MoCA 2.5 Adapter

Model#KB-M3-02E

User Guide

Table of Contents

1. Introduction 1
2. Package Contents 1
3. Requirements 1
4. Features 2
5. Setup Instructions 2
   - *Connecting the First Adapter* *2*
   - *Connecting Additional Adapters* *4*
6. MoCA protected Setup (MPS) 6
7. Web Management 6
8. Specifications 7
9. Safety and Compliance *7*
10. Warranty and Support *8*

1. Introduction

Thank you for choosing the KB-M3-02E MoCA 2.5 Adapter.

This adapter extends your home network through existing coaxial cables, delivering high-speed Ethernet connectivity to any room with a coax outlet. It ensures a stable, low-latency connection—ideal for streaming, online gaming, and other high-bandwidth applications. This variant is set on E-band (extended) and is compatible with SATV.

This guide provides step-by-step instructions for setup and troubleshooting.





2. Package Contents

- KB-M3-02E MoCA 2.5 Adapter
- Coaxial cable
- Power adapter
- Quick Start Guide
- Ethernet cable

3. Requirements

- An available coaxial port
- An electrical outlet near the installation location

4. Features

Dual 2.5G Ethernet Ports – Provides ultra-fast, reliable wired connections for demanding applications such as gaming, streaming, and large file transfers.
MoCA 2.5 Technology – Delivers high-speed coaxial networking with up to 2.5 Gbps throughput, operating on the **Extended E-Band (400–900 MHz)** for improved stability and performance.
TV Pass‑Through Port – Ensures uninterrupted SATV/STB service with full compatibility for 950–2300 MHz SATV systems**.**

LED Indicators:

- **Power LED**: Solid green when powered on.
- **MoCA LED**: Solid green when a MoCA connection is established.
- **Ethernet LEDs**:
  - Green: 2500 Mbps link
  - Orange: 1000 Mbps link
  - Red: 10/100 Mbps link
  - Blinking: Data transmission in progress

5. Setup Instruction

Connecting the First Adapter

1. **Disconnect** the coaxial cable from your TV or set-top box.
2. **Connect** that coaxial cable to the "TV" port on the MoCA adapter.



3. **Attach** a new coaxial cable from the wall outlet to the "MoCA" port on the adapter.



4. **Connect** one end of an Ethernet cable to your modem/router.

5. **Plug** the other end into one of the Ethernet ports on the adapter.



6. **Power** on the adapter using the provided power adapter.



When complete, the setup should look similar to the figure below:

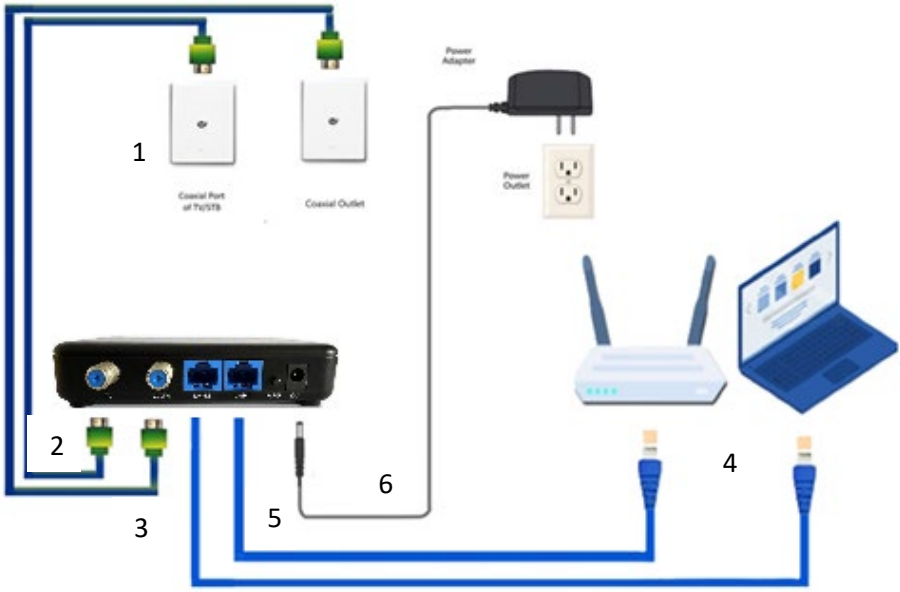

Your home network is now extended over the coaxial infrastructure.

Connecting Additional Adapters

1. **Find** a coaxial outlet near the desired location.
2. **Disconnect** any existing coaxial cable from a TV/STB (if applicable).
3. **Connect** that cable to the "TV" port on the adapter.
4. **Attach** a new coaxial cable from the wall outlet to the "MoCA" port on the adapter.
5. **Use** an Ethernet cable to connect the adapter to your device (e.g., PC, gaming console, or access point).



6. **Plug in** the power adapter and turn on the unit.
7. **Make** sure the Power, Ethernet and MoCA lights are solid green.



Repeat these steps to add more adapters as needed.

6. MoCA protected Setup (MPS)

MPS simplifies the connection of MoCA devices using a shared password.

1. Press the **MPS button** on any existing MoCA device.
2. Within **2 minutes**, press the **MPS button** on the KB-M3-02E adapter.

The **MoCA LED** will blink and turn solid once successfully paired.

7. Web Management

Each adapter has a built-in web interface for advanced configuration.

- **Default IP Address**: 192.168.144.200
- **Login**: admin
- **Password**: maxlinear

To access:

1. Set your computer's IP to 192.168.144.x (where x is 1-254, except 200).
2. Connect your PC to the adapter via Ethernet.
3. Open a browser and enter http://192.168.144.200.
4. Adjust settings such as frequency range, transmission rate, and IP configuration.

8. Specifications

Model Number: KB-M3-02E
Ethernet Ports: 2 x 2.5G LAN
MoCA 2.5 Standard Port (Extended E-band: 400MHz~900MHz)
TV Port (**Frequency Range** - 950MHz~2300MHz)
LED Indicators: Power, MoCA, LAN1, LAN2
Power : 12VDC, 1A
Certifications : FCC, CE, IC

Environnemental

Ambient temperature - 0ºC to 40ºC (32ºF to 104ºF)
Storage temperature -- 20ºC to 85ºC (-4ºF to 185ºF)
Operating humidity - 10% to 85% non-condensing
Storage humidity - 5% to 90% non-condensing
Note: Specifications are subject to change without notice

9. Safety and Compliance

- Keep the device dry; do not expose it to water or high humidity.
- Do not block ventilation openings.
- Use only the provided power adapter.
- For coaxial cable installations, ensure proper grounding per ANSI/NFPA70 regulations.

Regulatory Compliance

FCC (USA)

This device complies with Part 15 of the FCC Rules. Operation is subject to the following conditions: (1) it may not cause harmful interference, and (2) it must accept any interference received.

CE (EU)

This product complies with EMC Directive 2014/30/EU and RoHS Directive 2011/65/EU, meeting:

- EN 55032: EMC – Emission requirements
- EN 55035: EMC – Immunity requirements

10. Warranty and Support

Warranty

- **Hardware**: 1-year limited warranty.
- **Software updates**: 120 days from the date of purchase.

Technical Support

For troubleshooting and assistance, contact: **info@kiwee-broadband.com**.

Common Issues & Solutions

MoCA LED is off:
- Ensure the adapter is correctly connected to the coaxial outlet.
- Try a different coaxial outlet.
- Verify that your home's coaxial network is connected properly.

Set-top box stops working:
- Use a coaxial splitter instead of connecting directly.

Incompatible with Cable TV/DOCSIS Network:
- These adapters work with satellite TV; please choose KB-M3-02 for Cable TV/DOCSIS Network compatible solutions.

Incompatible with other D band MoCA devices:
- These adapters work with E band MoCA devices; please choose KB-M3-02 for D band MoCA devices solutions.

Factory Reset

To reset the device into factory default settings, press the reset button available under KB-M3-02E for 10 seconds.



For additional support, visit our website or email us at **info@kiwee-broadband.com**.

Thank you for choosing Kiwee Broadband. We hope you enjoy a seamless networking experience!